Gestures controlled Intelligent Wheel chair with device switching

The aim of this project is to controlling a wheel chair and electrical devices by using MEMS ACCELEROMETER SENSOR (Micro Electro-Mechanical Systems*)* technology. MEMS ACCELEROMETER SENSOR is a Micro Electro Mechanical Sensor which is a highly sensitive sensor and capable of detecting the tilt. This sensor finds the tilt and makes use of the accelerometer to change the direction of the wheel chair depending on tilt. For example if the tilt is to the right side then the wheel chair moves in right direction or if the tilt is to the left side then the wheel chair moves in left direction. Wheel chair movement can be controlled in Forward, Reverse, Left and Right direction along with operating the electrical devices.

Automation is the most frequently spelled term in the field of electronics. The hunger for automation brought many revolutions in the existing technologies. One among the technologies, which had greater developments, is the MEMS ACCELEROMETER SENSOR sensor. These had greater importance than any other technologies due its user-friendly nature. MEMS ACCELEROMETER SENSOR based devices can be easily reachable to the common man due to its simpler operation, and at the same time it challenges the designers of the device.

This device is portable and this system operation is entirely driven by wireless technology. User can wear it to his wrist like a watch and can operate it by tilting the MEMS ACCELEROMETER SENSOR Accelerometer sensor.

This project makes use of a micro controller, which is programmed, with the help of embedded C instructions. This microcontroller is capable of communicating with transmitter and receiver modules. The MEMS ACCELEROMETER SENSOR based sensor detects the tilt and provides the information to the microcontroller (on board

computer) and the controller judges whether the instruction is right movement or left movement instruction and controls the direction respectively. The controller is interfaced with two dc motors to control the direction of the wheel chair. Also, the devices are operated wirelessly through MEMS accelerometer sensor. To perform the task, the controller is loaded with intelligent program written using Embedded 'C' language.

Features:

1. Can be easily monitored.
2. Ease in understanding the working module.
3. Controlling of electrical devices wirelessly.
4. Easy to operate.
5. Low power consumption.

This project provides us with the learning's on the following aspects:

1. Characteristics of MEMS ACCELEROMETER SENSOR
2. Interfacing Motors with Microcontroller.
3. Interfacing MEMS ACCELEROMETER SENSOR with Microcontroller.
4. Embedded C programming.
5. Interfacing Triac with Microcontroller.
6. Relay working principle.
7. Interfacing Relay with Microcontroller.
8. PCB Design and development.

The major building blocks of this project are:

1. Regulated Power Supply.
2. MEMS accelerometer sensor.
3. RF transmitter and receiver modules.
4. Encoder and Decoder.
5. Relay with driver.
6. Triac with driver.
7. DC motors with driver.
8. Crystal oscillator.
9. Reset.
10. LED indicators

Software's used:

1. PIC-C compiler for Embedded C programming.
2. PIC kit 2 programmer for dumping code into Micro controller.
3. Express SCH for Circuit design.
4. Proteus for hardware simulation.

Regulated Power Supply:

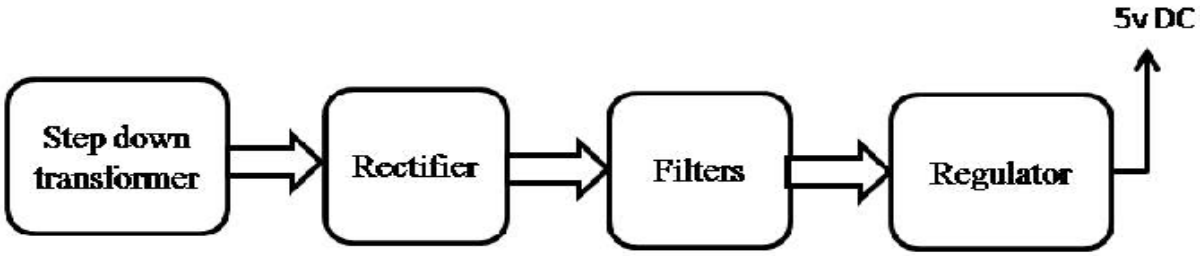

BLOCKDIAGRAM:

Gestures controlled Intelligent Wheel chair with device switching
1.Transmitter

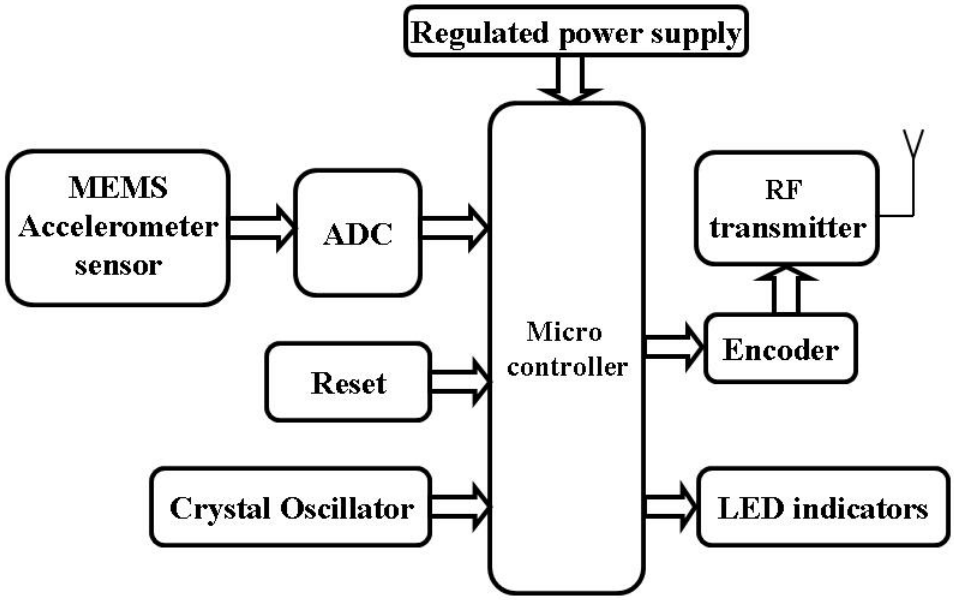

Gestures controlled Intelligent Wheel chair with device switching

2. Receiver

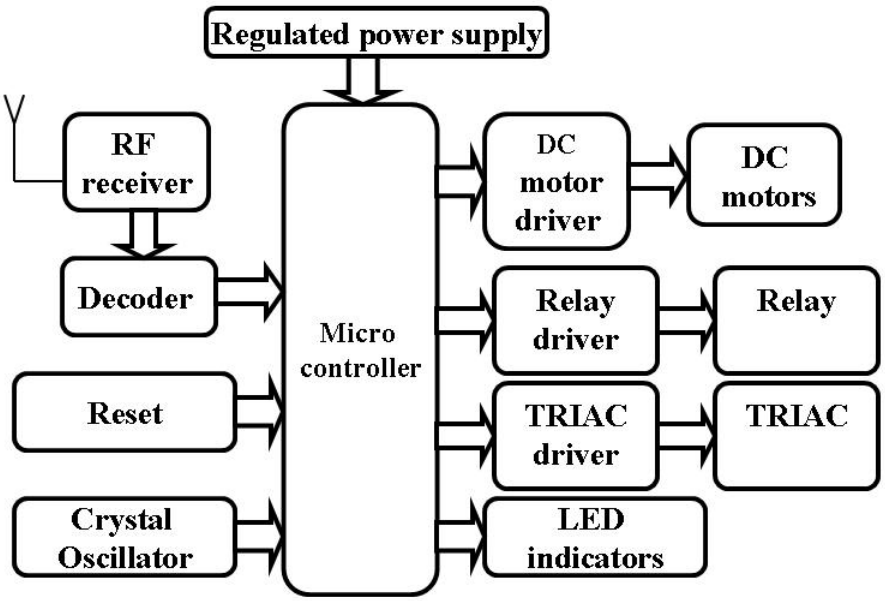

Hand gestures controlled intelligent wheel chair
2. Receiver