A Novel wireless self powered Microcontroller based monitoring circuit for Photo Voltaic panels in Grid connected systems

The project aims in designing an embedded system which is capable of operating from the power supply obtained by the photo voltaic panel (self-powered).

The system consists of a Microcontroller which acts as a control unit for the whole system. The obtained energy from photo voltaic panel is fed to regulated power supply unit which provides 5V DC required for the operation of the Microcontroller. Also, the voltage is fed to the Microcontroller through voltage measuring circuit which measures the energy obtained and displays on LCD and also, transmit this information using Zigbee based transmitter. In the receiver section this information is fed to Microcontroller which is interfaced to PC. The energy obtained is displayed in the hyper terminal of PC. The Microcontroller is programmed using powerful Embedded C programming.

Zigbee is a wireless technology developed as an open global standard to address the unique needs of low-cost, low-power, wireless sensor networks. Zigbee is the set of specs built around the IEEE 802.15.4 wireless protocol.

As Zigbee is the upcoming technology in wireless field, we had tried to demonstrate its way of functionality and various aspects like kinds, advantages and disadvantages using a small application of controlling the any kind of electronic devices and machines. The Zigbee technology is broadly adopted for bulk and fast data transmission over a dedicated channel**.**

The main objectives of the project are:

1. Usage of solar energy.
2. Voltage measurement and display on PC.
3. Wireless data transmission.

The project provides the following learning's:

1. Interfacing PC to Microcontroller.
2. Interfacing Zigbee modules to Microcontroller.
3. Interfacing LCD to Microcontroller.
4. Photovoltaic panel.

The main building blocks of the project are:

1. Regulated Power Supply.
2. Microcontroller.
3. MAX 232.
4. Crystal oscillator.
5. Reset.
6. LCD with driver.
7. Zigbee module.
8. Crystal oscillator.
9. LED indicators.

Software's used:

1. PIC-C compiler for Embedded C programming.
2. PIC kit 2 programmer for dumping code into Micro controller.
3. Express SCH for Circuit design.
4. Proteus for hardware simulation.

Regulated Power Supply:

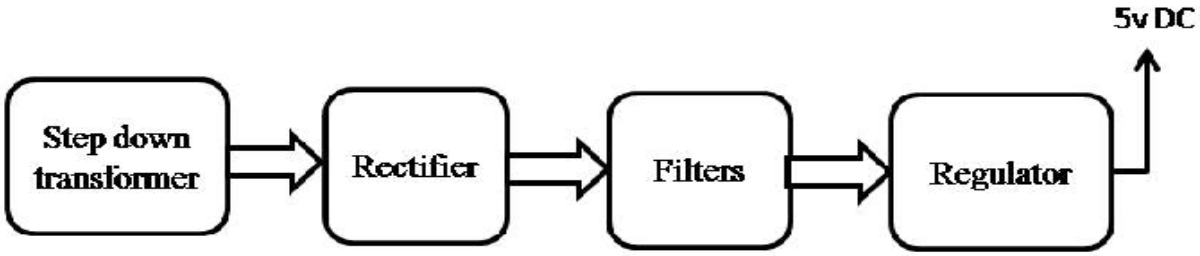

BLOCK DIAGRAM:

A Novel wireless self powered Microcontroller based Monitoring circuit for Photo Voltaic panels in Grid connected systems

1. Transmitter

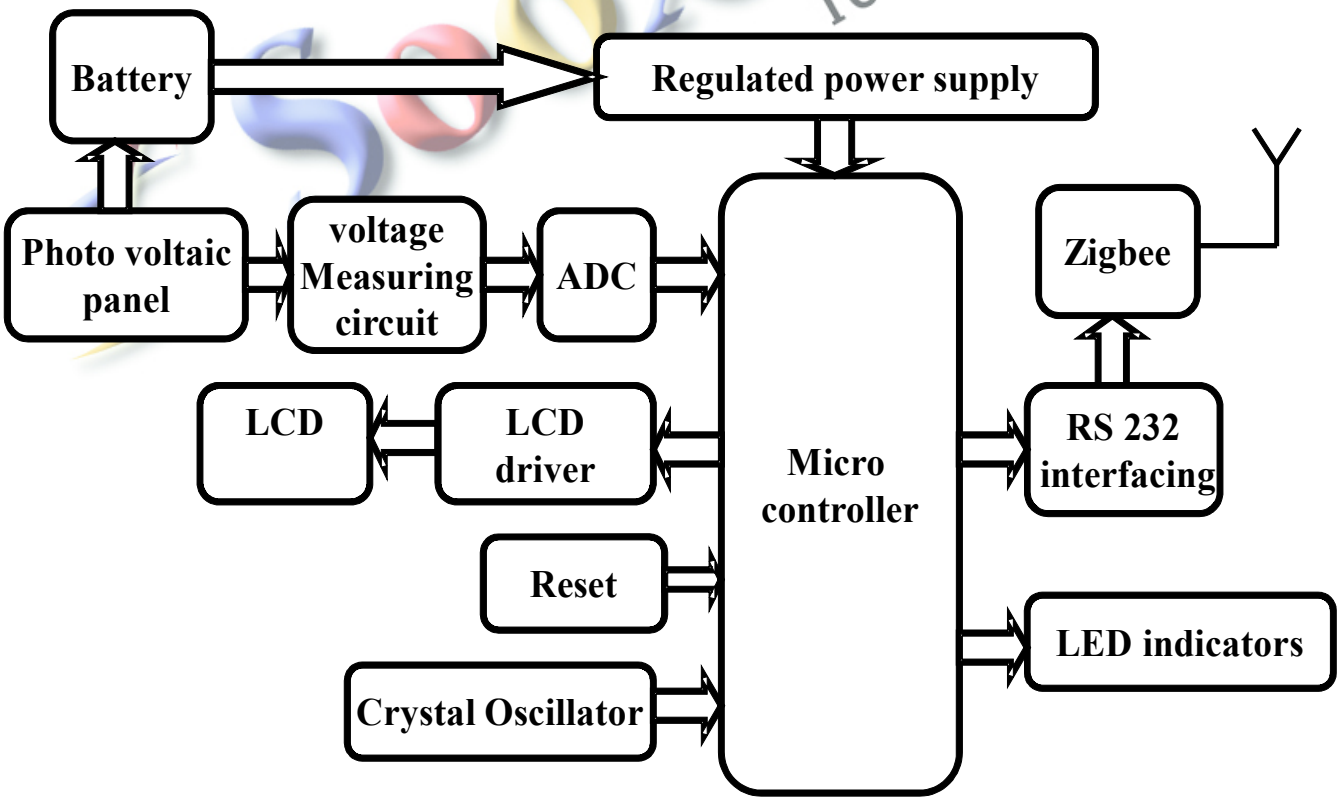

A Novel wireless self powered Microcontroller based Monitoring circuit for Photo Voltaic panels in Grid connected systems
2. Receiver